Beam Clamps and Hanger Rod Supports

E-160 Adjustable Beam Clamp (½" Rod)

- Clamps to I-beams where edge of beam flange does not exceed .8" thickness
- Hook rod is furnished in three lengths to fit beam flanges up to 6, 9 or 12" widths

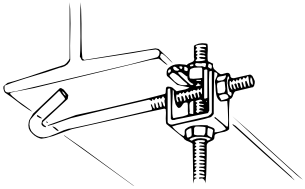

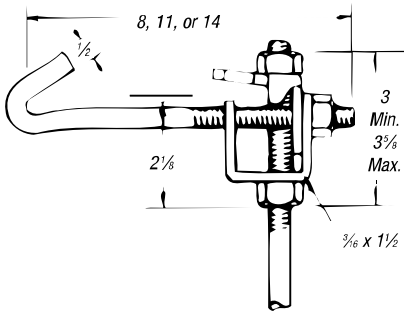

CAT. NO. FOR ½" HANGER RODS	FOR BEAM FLANGE WIDTH (IN.)	WT. LBS./C
E-160-1/2-6	2½ to 6	115
E-160-1/2-9	5½ to 9	125
E-160-1/2-12	8½ to 12	154

Load rating 800 lbs. with a safety factor of 3.

Assembly requires hanger rod of the proper length and size plus two H-114-D nuts.

3/16" steel, ½" hook rod.

Galv-Krom® finish.

U577 Adjustable Swinging Hanger Flange (⅜" or ½" Rod)

- Flange has 13/32" holes for connection to ceiling

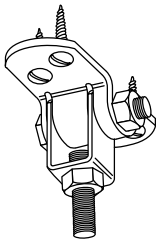

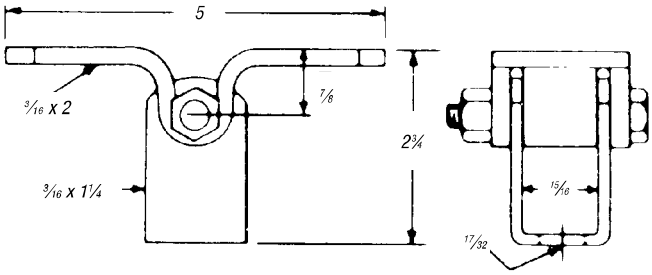

CAT. NO.	WT. LBS./C
U577	100

Assembly requires ⅜" or ½" hanger rod of proper length plus two H-114-C or H-114-D nuts.

3/16" steel.

Flange has 13/32" diameter holes for connection to ceiling.

Galv-Krom® finish.

E-177 Adjustable Channel Clamp (½" Rod)

- Adjustable to fit all structural channels up to a maximum flange width of 3¼", and all structural angles with leg up to 3" long and not more than ⅜" thick

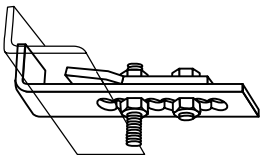

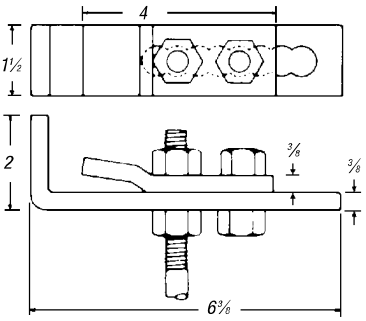

CAT. NO.	WT. LBS./C
E-177	183

Load rating is 800 lbs. with a safety factor of 3.

Assembly requires ½" hanger rod of the proper length plus two H-114-D nuts.

⅜" steel.

Galv-Krom® finish.