M-11152 | 2

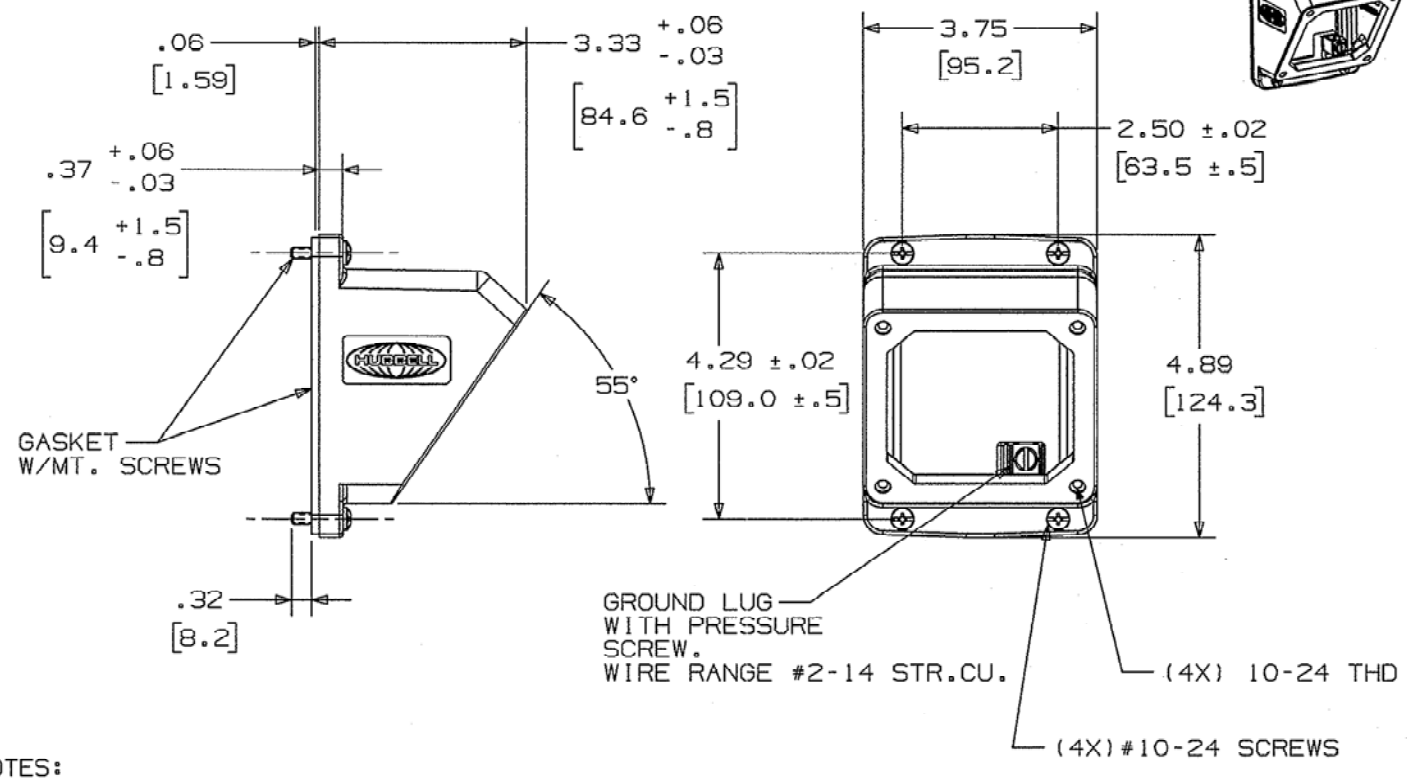

NOTES:

1. DIMENSIONS ARE IN INCHES [MM].
2. TOLERANCE TO BE .XX ±.03
   ANGLES±2°
3. UL AND cUL LISTED. METALLIC OUTLET BOXES UL514A, CSA C22.2 NO.18.1-04.
4. ADAPTER VOLUME 25 CU.IN. 410 CM³.
5. ANGLE ADAPTER FOR USE WITH IEC PIN AND SLEEVE RECEPTACLE 20A OR 30A 3W, 4W AND 5W DEVICES.

CODE 74545

LIST OF PARTS

DESCRIPTION	MATERIAL	FINISH
ANGLE ADAPTER	CAST ALUM	GREY
GASKET	NEOPRENE	
MT. SCREWS	STAINLESS STEEL	
GROUND LUG	ALUM	
GROUND LUG SCREW	STEEL	
PRESSURE SCREW	ALUM	

SYM	REVISIONS	APP	DATE
2	CHANGE DIMENSION FROM 4.79 TO 4.89 ADDED NOTES 4 & 5 UPDATED TOLERANCE DCN 15721 04/28/09	CAC	
1	NEW RELEASE PER DCN 15335 11/24/08	CAC	

THE DESIGN AND DIMENSIONS OF THE PRODUCT SHOWN ON THIS DRAWING ARE SUBJECT TO CHANGE WITHOUT NOTICE

TITLE

20A,30A ANGLE ADAPTER

TOLERANCES UNLESS OTHERWISE SPECIFIED
FRACTIONS ±1/64
DECIMALS ±.005
ANGLES ±2°

WIRING DEVICE-KELLEMS
HUBBELL INCORPORATED
BRIDGEPORT, CT

DR. BY CAC	APP. BY CAC
TR. BY	SCALE 1/2
CHK'D BY	DATE 11/18/08

DIMENSION SHEET FOR CAT. NO. AA203055

REPAIRABLE ☒ NON-REPAIRABLE ☐

B

M-11152

2