ZONE	NO.	DESCRIPTION	DATE	APPRD.	LTR. NO.
	1	SUBMIT FOR RELEASE	5/7/2020	PW	

2 HOLE ROUND COVER - 1/2"

TP7304	GREY
TP7306	BRONZE
TP7305	WHITE

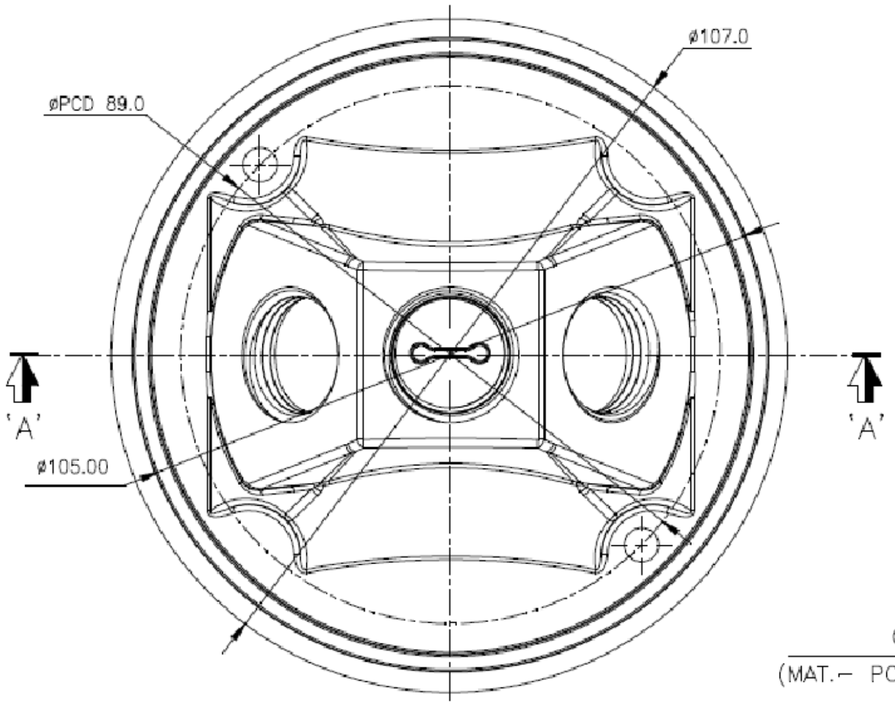

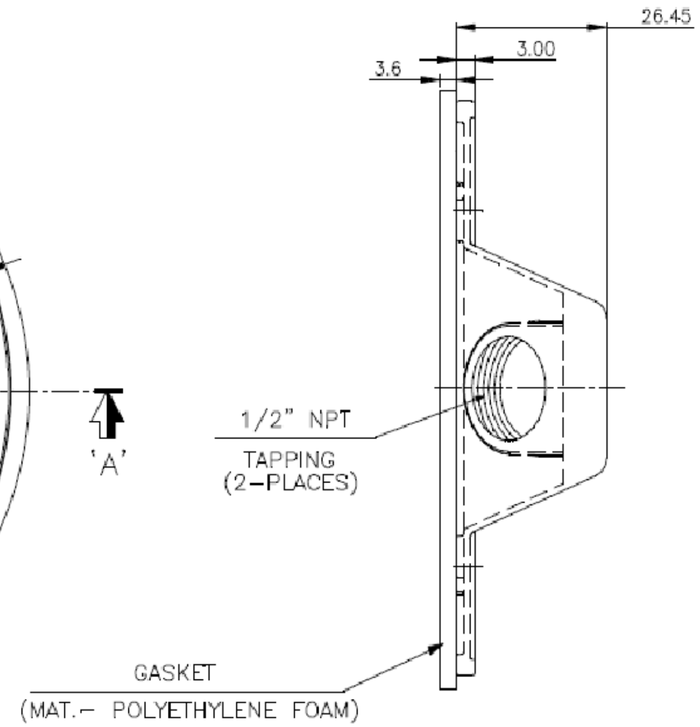

ACCESSORIES:

SR.No.	DESCRIPTION	QTY
2	CLOSURE PLUG (PLASTIC)	2
3	SCREW (NO.10 X 0.50")	2
4	SCREW (NO.8 X 0.31")	1

NOTES:

1. CERTIFICATION/LISTING:
2. ENVIRONMENTAL RATING:
   -WEATHERPROOF
   -WET LOCATION

THIS IS PROPERTY OF EATON AND CONTAINS CONFIDENTIAL AND TRADE SECRET INFORMATION. POSSESSION DOES NOT CONVEY ANY RIGHTS TO LOAN, SELL OR DISCLOSE SAID INFORMATION. REPRODUCTION OR USE FOR ANY PURPOSE OTHER THAN WHICH IT WAS SUPPLIED MAY NOT BE MADE WITHOUT EXPRESS WRITTEN PERMISSION OF EATON. THIS DRAWING IS ON LOAN AND IS TO BE RETURNED UPON REQUEST.

MATERIAL:

FINISH:

NEXT ASSY. | USED ON

APPLICATION

TOLERANCES
UNLESS OTHERWISE SPECIFIED

	in.	mm
.X	± .1	± .3
.XX	± .01	± .13
.XXX	± .005	± .000
ANGLES	± 1.5°	± 1.5°

DIM AND TOL IN ACCORDANCE WITH ASME Y14.5 2009.

THIRD ANGLE PROJECTION

UNLESS OTHERWISE SPECIFIED, ALL PRIMARY DIMENSIONS ARE IN INCHES. DIMENSIONS IN [ ] ARE IN MILLIMETERS.

ORIGINAL DATE	05/4/2020
REDRAWN DATE	
DRAWN BY	TAK
CHECKED BY	
APPROVED BY	
APPROVED BY	

EATON CROUSE-HINDS SERIES

TITLE 2 HOLE ROUND COVER 1/2"

FIRST MADE FOR WEATHERPROOF

SIZE	CODE IDENT. NO.		REV.
C		TP7	1

SCALE 1:1 | WT. | SHEET 1 OF 1

SW_REV 11/2015

CCHSY-SW-Template-C

DO NOT SCALE DRAWING